Easy Conversion Chart:
BE3-81O, 81U, 81O/U, 81OT, 81UT, 81OT/UT
To
ES-81O, 81U, 81O/U

This simple chart is designed to help you choose the appropriate ES style configuration with the same minimum coverage as your BE3. Just match up the color-coded option boxes on the left with those on the right. Option boxes colored black require no selection. For reference, see the product specification style charts on Page 2. For assistance, contact technical support at 618-654-2341.

Enter your BE3 style configuration below to generate new ES style configuration

From **BE3 Style Configuration**

BE3	Model Number	Sensing Input Type	Nominal Input Type	Frequency	External Power	Output Type
	81O					
	81OT					
	81U					
	81UT					
	81O/U					
	81OT/UT					
		1				
			A B C D S[1]			
				2[2] 3 4		
					N[3]	
						1 2 3

Enter your current BE3 configuration:

BE3		1			N	

To **ES Style Configuration**

ES	Model Number	Sensing Input Type	Nominal Input Type	Timing	Frequency	External Power	Option 1	Option 2	Option 3
	81O			A					
	81O			B					
	81U			A					
	81U			B					
	81O/U			A					
	81O/U			B					
		1							
			A C D F S[1]						
					na[2] 2 3				
						N[3]			
							0 2		
								N A[5]	
									0

ES		1				N		N	0

1 For other nominal voltages, contact Basler Electric.

2 Frequency must be 50 or 60 Hz for ES. 400 Hz units not available.

3 External Power is not required for ES. No selection necessary.

4 If Timing selection is A, then Option 1 selection must be 2. If Timing selection B, then Option 1 selection must be 0.

5 Option 2 selection A not available.

6 ES-81O, 81U, 81O/U wiring terminals are in identical pin-out positions as previous BE3 wiring terminals. Connection diagrams are shown on Page 3 and in Instruction Manual 9500100996.

Sample Style Configuration Conversion

BE3-81O, 81U, 81O/U, 81OT, 81UT, 81OT/81UT		ES-81O, 81U, or 81O/U	
Model Number, 81UT	81UT	81U	Model Number, 81U
Sensing Input Type, Single Phase	1	1	Sensing Input Type, Single Phase
Nominal Input Type, 120 Vac	A	A	Nominal Input Type, 120 Vac
Frequency, 60 Hz	4	B	Timing, Adjustable, 0 to 20 seconds
External Power, None	N	3	Frequency, 60 Hz
Output, De-energize To Trip (81UT)	2	N	External Power, Not required
		0	Option 1, None
		N	Option 2, None
		0	Option 3, None

Some options for the ES have been preselected in the above guide. To insure accuracy, please verify your style configuration using the ES style chart on page 2, referencing Instruction Manual 9500100996 or contacting Technical Support.

BE3-81O, BE3-81U, BE3-81O/U Style Number Identification Chart

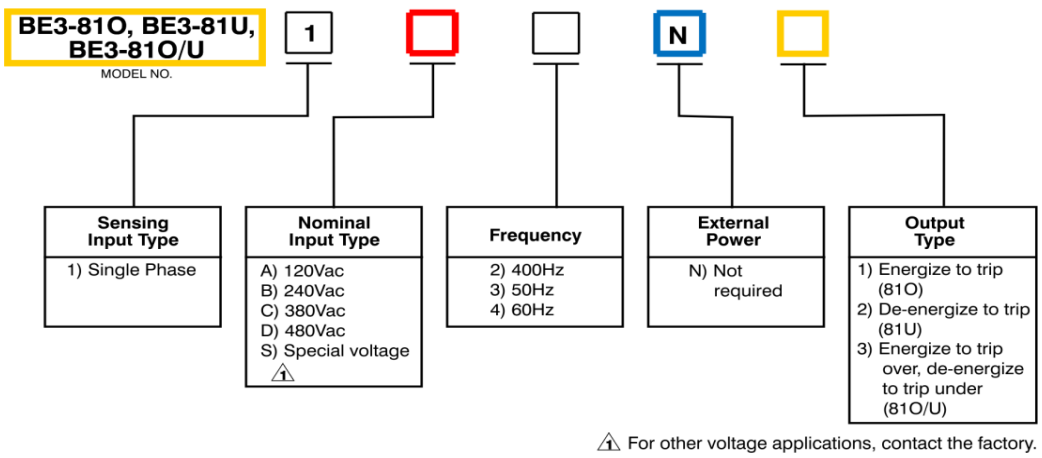

BE3-81OT, BE3-81UT, BE3-81OT/UT Style Number Identification Chart

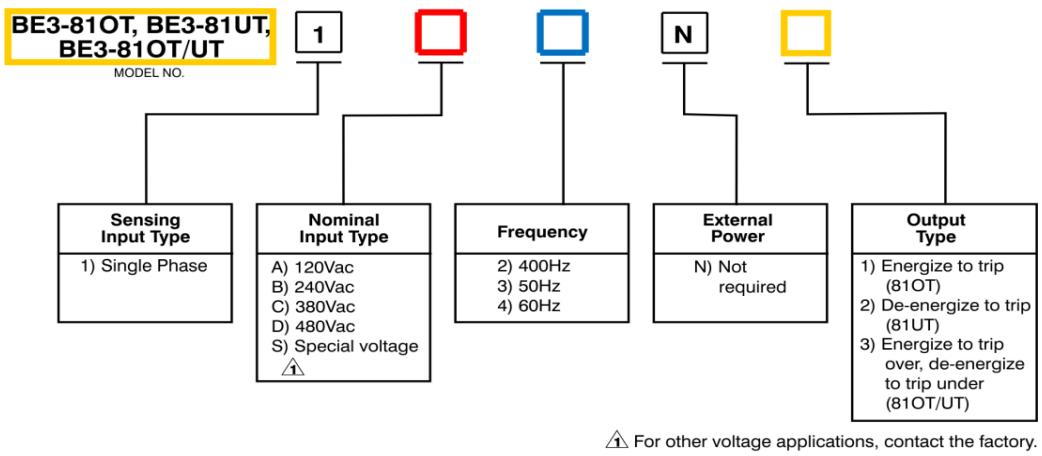

ES-81O, ES-81U, ES-81O/U Style Number Identification Chart

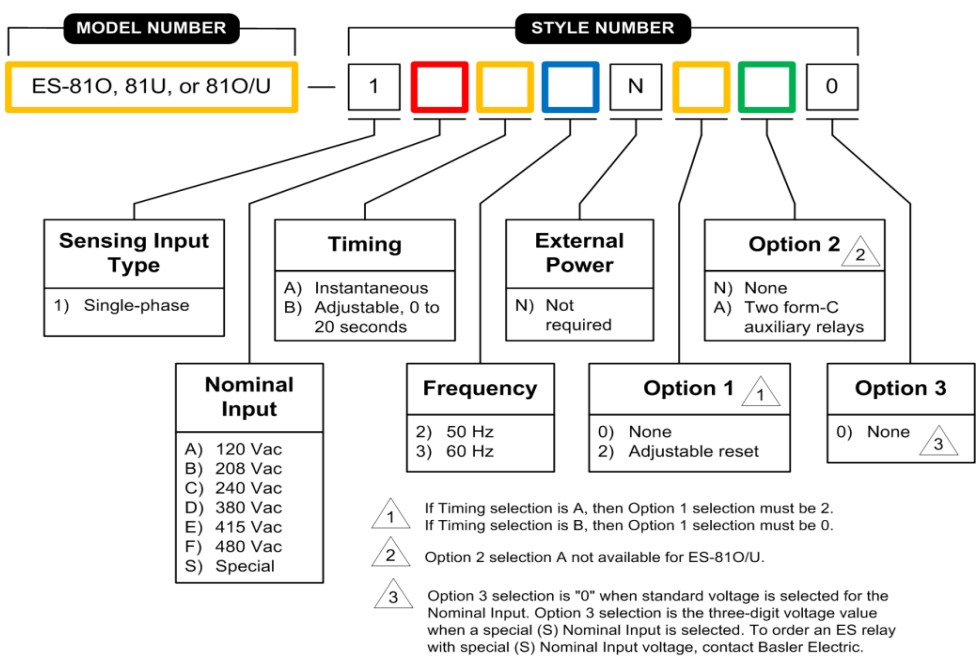

BE3-81O/U Connection Diagram

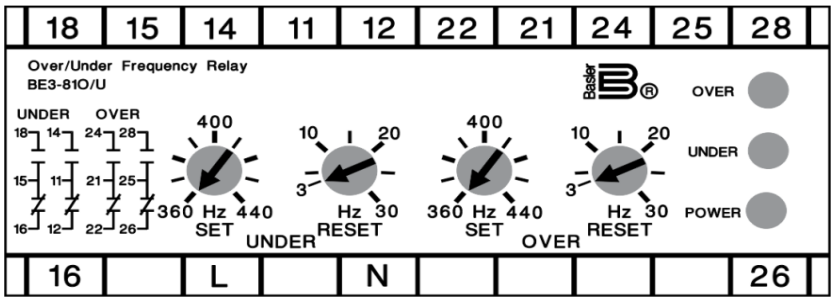
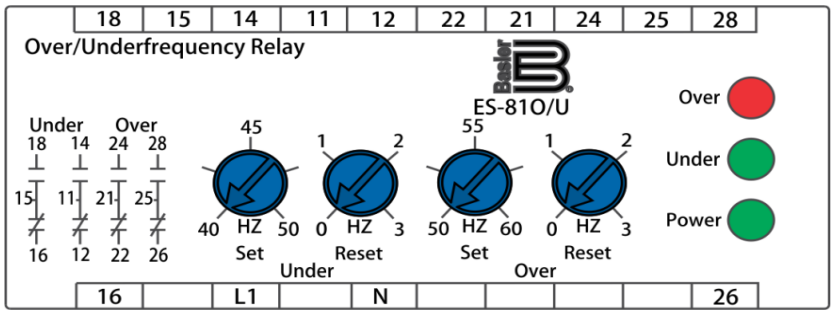
ES-81O/U Connection Diagram