Easy Conversion Chart:
BE1-951 to BE1-11*f*

This simple chart is designed to help you choose the appropriate BE1-11 style configuration with the same minimum coverage as your BE1-951. Just match up the color-coded options on the left (BE1-951) with those on the right (BE1-11*f*). Options colored black require no selection. For reference, see the product spec style charts on Page 2.
For assistance, contact technical support at 618-654-2341.

Enter your BE1-951 style configuration below to generate new BE1-11 style configuration

From **BE1-951 Style Configuration**

BE1-951	Current Sensing	Voltage Sensing	Cover	Power Supply	Case	Communication Protoco	Option 1
	A[1]						
	B						
	D[1]						
	E						
	F						
		3[2]					
		4[2]					
			A[3]				
			B[3]				
			N[3]				
				1			
				2			
				3			
					G		
					H		
					R		
					S		
					C		
					D		
						0	
						1	
						3	
						4	
						5	
						7	
							N[4]
							Y[4]
							U[4]
							W[4]

Enter your current BE1-951 configuration below

BE1-951							

To

To **BE1-11 Style Configuration**

BE1-11	Application	Phase Current	Ground Current	Power Supply	RS-485 Port Protocol	Ethernet Protocol	Case	Inputs/Outputs	Option 1	Network Connections	Option 3	Option 2	Firmware
		1	B										
		1	B										
		5	A										
		5	A										
		5	B										
				1									
				2									
				3									
							H[5]	1					
							H[5]	2					
							J[5]	1					
							J[5]	2					
							J[5]	1					
							J[5]	2					
					N	0							
					M	0							
					D	0							
					N	1							
					M	1							
					N	2							

BE1-11	F								D	0	E	0	00

1 BE1-11 always comes with neutral CT. Any BE1-11 Ground Current selection is valid for this BE1-951 option.
2 BE1-11 comes standard with 3-phase and Aux Voltage. No selection necessary.
3 BE1-11 does not use front covers for any case styles. No selection necessary.
4 BE1-11 incorporates all of these options in the standard relay. No selection necessary.
5 BE1-11 is available in a rack mount (H), panel mount (P) or S1-sized vertical mount (J) option.

DISCLAIMER: Some options for the BE1-11*f* have been preselected in the above guide. To insure accuracy, please verify your style configuration using the BE1-11 style chart on page 2.

Sample Style Configuration Conversion

	BE1-951	BE1-11*f*	
5 amp Phase with 5 amp Ground	E	5	5 amp Phase
3-phase Sensing w/ Auxiliary Input	**4**	A	5 amp Ground
No Cover	**N**	2	125/250 PS
125/250 PS	2	M	Modbus over 485
H case with N.O. Alarm	G	0	No Ethernet
Modbus over 485	1	H	H case
None	**N**	1	Standard I/O, N.O. Alarm
		D	Directional Power
		0	Copper Ethernet
		E	Option 3, None
		0	Option 2, None
		00	Lastest Firmware

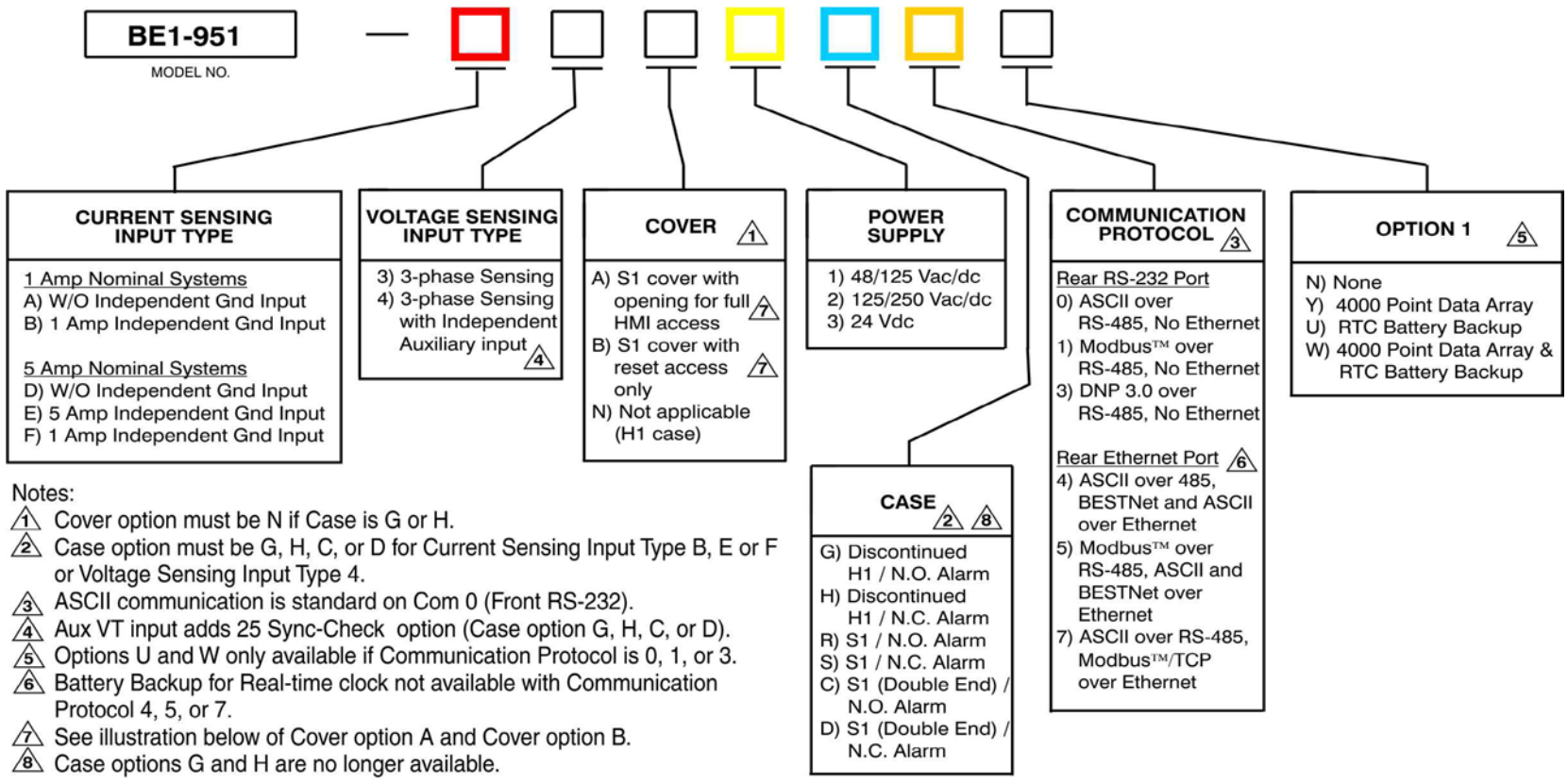

Notes:

1. Cover option must be N if Case is G or H.
2. Case option must be G, H, C, or D for Current Sensing Input Type B, E or F or Voltage Sensing Input Type 4.
3. ASCII communication is standard on Com 0 (Front RS-232).
4. Aux VT input adds 25 Sync-Check option (Case option G, H, C, or D).
5. Options U and W only available if Communication Protocol is 0, 1, or 3.
6. Battery Backup for Real-time clock not available with Communication Protocol 4, 5, or 7.
7. See illustration below of Cover option A and Cover option B.
8. Case options G and H are no longer available.

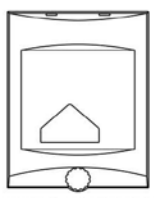

COVER OPTION A

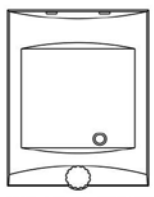

COVER OPTION B

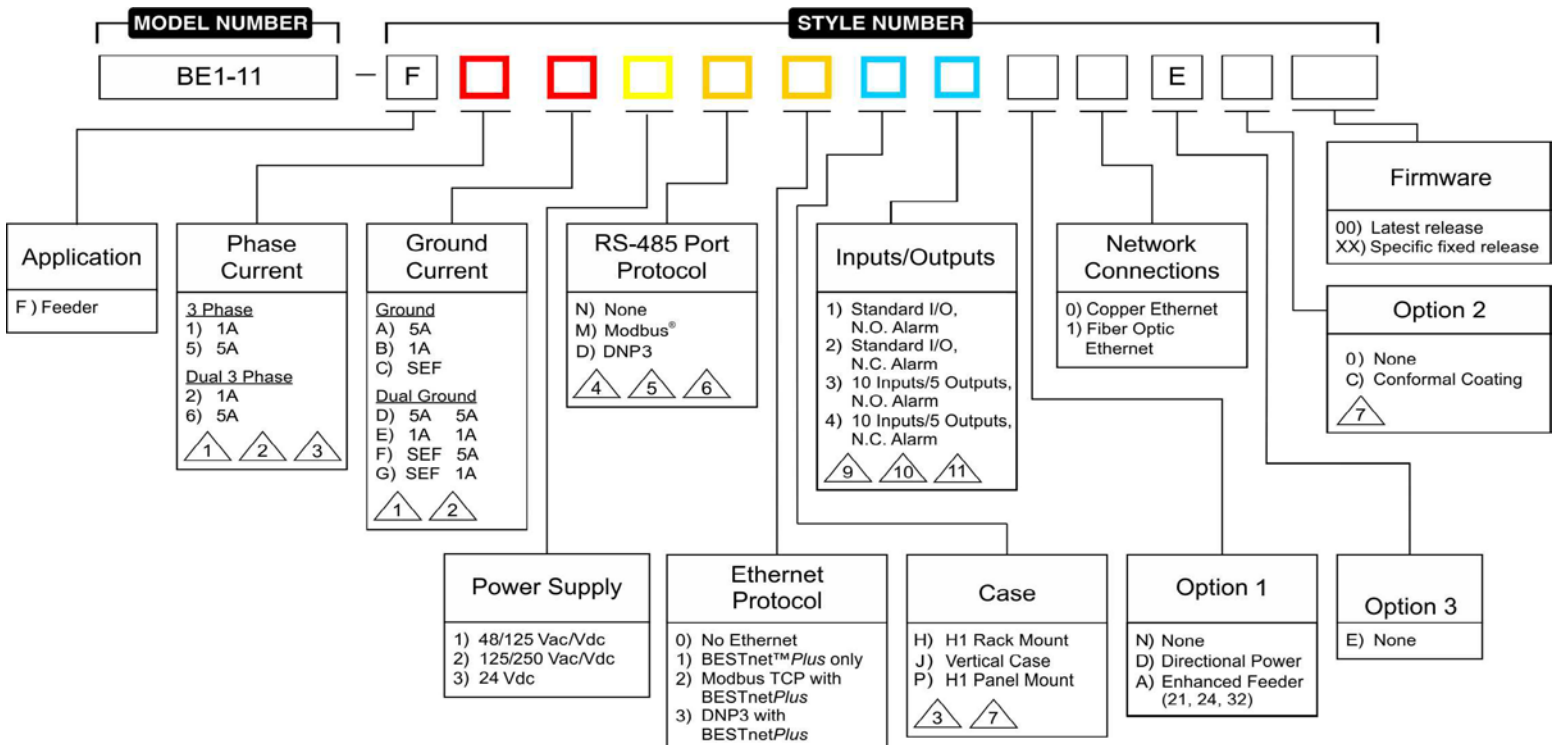

1. If Dual Phase Current Input or Dual Ground Current input choice is made, then both current input types must be dual.
2. If Ground Current is A, D or F, Phase Current must be 5A.
3. If Phase Current is 2 or 6, Case must be J.
4. If Ethernet Protocol is 5, RS-485 Port Protocol must be N.
5. For communications with Remote RTD Module, RS-485 Protocol must be N or Ethernet Protocol must be 1, 2, 3, 4, or 5.
6. If RS-485 protocol is D, Ethernet protocol cannot be 3 or 4.
7. If Option 2 is C, Case must be J.
8. When a DNP3 over Ethernet protocol (3 or 4) is purchased, a BESTCOMS*Plus*® selection box permits using DNP3 over Ethernet or over RS-485. RS-485 selection must be N.
9. When Inputs/Outputs is 1 or 2, a J-style case has 7 inputs and 8 outputs; an H or P style case has 4 inputs and 5 outputs.
10. If Inputs/Outputs is 3 or 4, Case must be J.
11. If Inputs/Outputs is 1 or 3, the contact is open for the alarm condition. If Inputs/Outputs is 2 or 4, the contact is closed for the alarm condition.